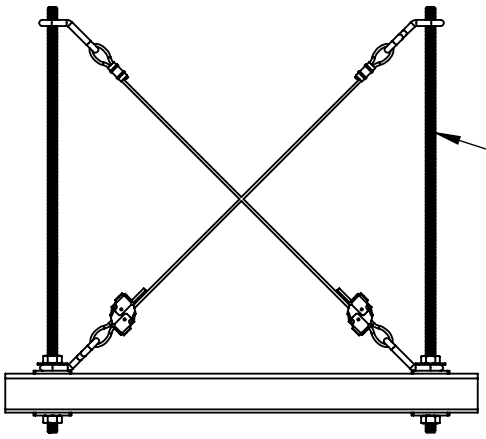

REFER TO VAICO
FOR ANCHORAGE
REVIEW PRIOR TO
INSTALLATION

SECTION THRU TRAPEZE
ALTERNATE CABLE TRANSVERSE
BRACE PATTERN



SECTION THRU TRAPEZE
STD. CABLE TRANSVERSE BRACE
PATTERN

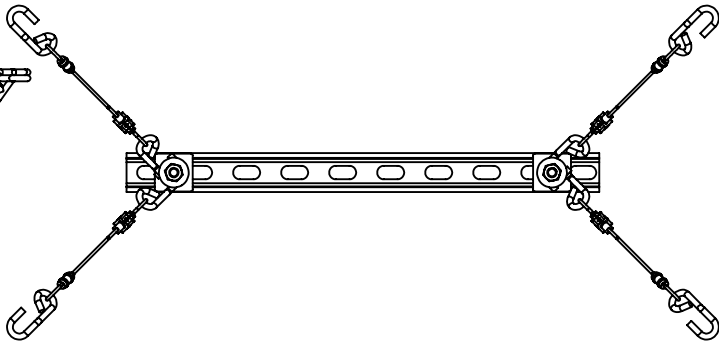

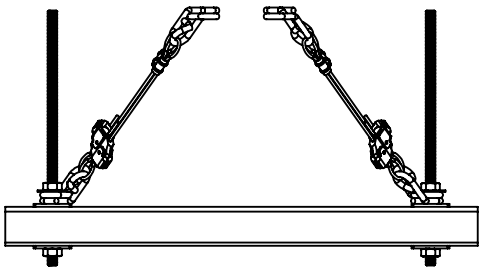

SECTION TRHU TRAPEZE
ALTERNATE CABLE TRANVERSE
BRACE PATTERN

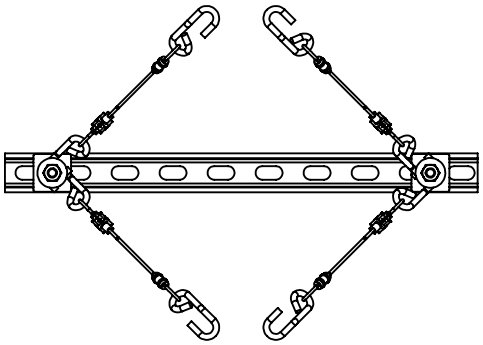

OVERHEAD VIEW
ALTERNATE SPLAYED CABLE
BRACE PATTERN

vaico

31 Whakapirau Road, Maungaturoto, New Zealand
vaicoglobal.com
Copyright Vaico Global © 2024

BRT2

Alternate Cable Brace Arm

Patterns Trapeze Supported Systems

Drawing No.
BRT2

Revision
B